Upload Tugas ke-6

TUGAS-6

MEKANIKA TERAPAN (MTS 271201)

Oleh :

Nama : Saeman

NIM : 192710038

Dosen Program : Dr. Firdaus, ST., M.T

PROGRAM PASCASARJANA MAGISTER TEKNIK SIPIL

UNIVERSITAS BINA DARMA

2020

Tugas-6

Beban vertikal P dipikul oleh rangka batang statis tak tentu seperti tergambar. Rangka batang terbuat dari baja dengan luas penampang 350 mm. hitunglah deformasi dan tegangan pada setiap batang.

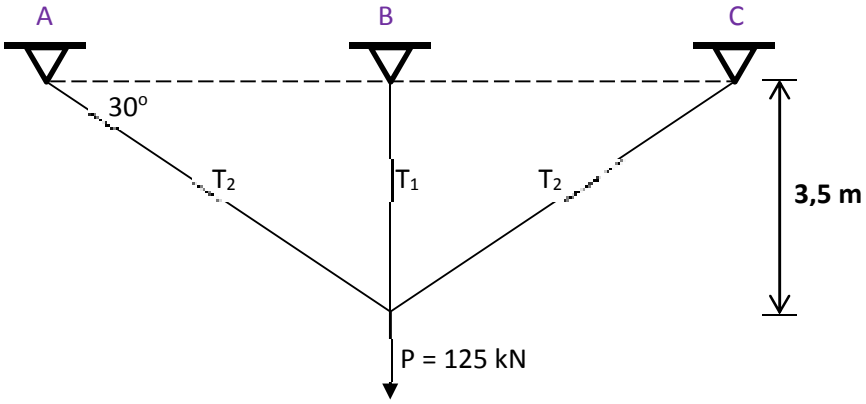

Jawab :

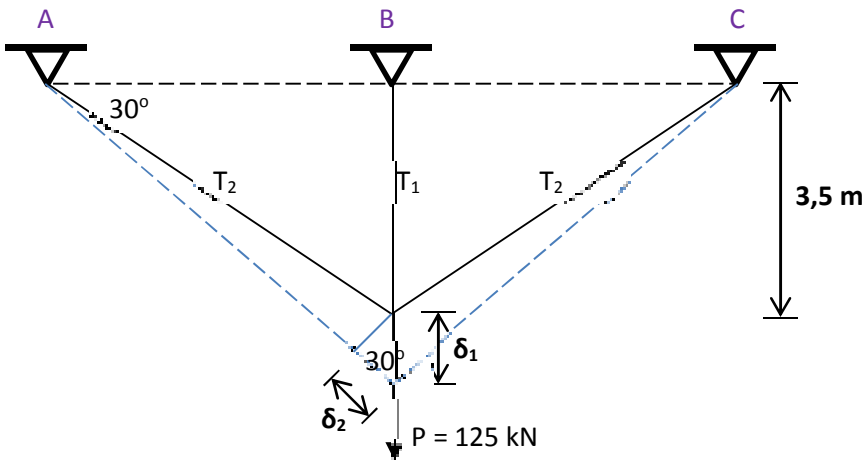

$$\sin 30^0 = \frac{LT_1}{LT_2} \rightarrow LT_2 = \frac{LT_1}{\sin 30^0} = \frac{3{,}5\ m}{\frac{1}{2}} = 7\ m$$

$$\sin 30^0 = \frac{\delta_2}{\delta_1} \rightarrow \delta_2 = \delta_1 . \sin 30^0 = \frac{1}{2}\delta_1$$

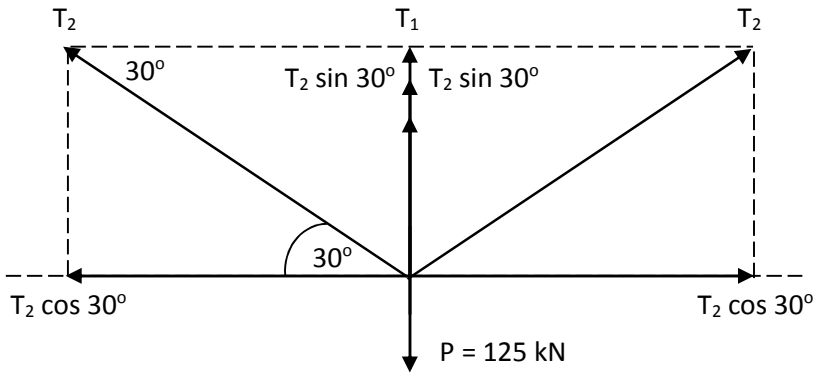

$$\sum V = 0$$

$$T_1 + 2T_2 \sin 30^0 = P \rightarrow T_1 + 2T_2 \frac{1}{2} = 125\ kN \rightarrow T_1 + T_2 = 125\ kN$$

$$T_1 = \frac{A.E.\delta_1}{L_{T1}} = \frac{350\ \cancel{mm^2}.\ 200.10^3 \frac{N}{\cancel{mm^2}}.\delta_1}{3500\ mm} = 20000\ \delta_1\ \frac{N}{mm}$$

$$T_2 = \frac{A.E.\delta_2}{L_{T2}} = \frac{350\ \cancel{mm^2}.\ 200.10^3 \frac{N}{\cancel{mm^2}}.\frac{1}{2}\delta_1}{7000\ mm} = 5000\ \delta_1\ \frac{N}{mm}$$

$$T_1 + T_2 = 125\ kN \rightarrow 20000\ \delta_1\ \frac{N}{mm} + 5000\ \delta_1\ \frac{N}{mm} = 125000\ N \rightarrow 25000\ \delta_1\ \frac{N}{mm}$$

$$= 125000\ N$$

$$\delta_1 = \frac{125000}{25000}\ mm = 5\ mm$$

$$\delta_2 = \frac{1}{2}\delta_1 = \frac{1}{2}.5\ mm = 2{,}5\ mm$$

$$\sigma_1 = \frac{T_1}{A_1} = \frac{20000\ \delta_1\ \frac{N}{mm}}{350\ mm} = 285{,}71\ \frac{N}{mm^2} = 285{,}71\ MPa$$

$$\sigma_2 = \frac{T_2}{A_2} = \frac{5000\ \delta_1\ \frac{N}{mm}}{350\ mm} = 71{,}43\ \frac{N}{mm^2} = 71{,}43\ MPa$$

Universitas Bina Darma

Nama Mahasiswa	:	Agus Rudiyanto/ 192710046/ MTS4
Mata Kuliah	:	MEKANIKA TERAPAN (MTS271201)
Dosen	:	Dr. Firdaus, M.T.
Tugas	:	EL. 06

Tugas-8

Beban vertikal P dipikul oleh rangka batang statis tak tentu seperti tergambar. Rangka batang terbuat dari baja dengan luas penampang 350 mm. Hitunglah deformasi dan tegangan pada setiap batang.

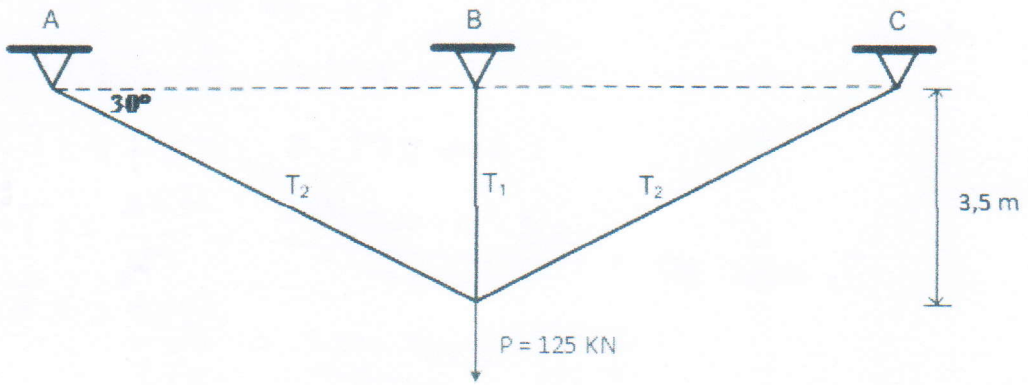

Jawab :

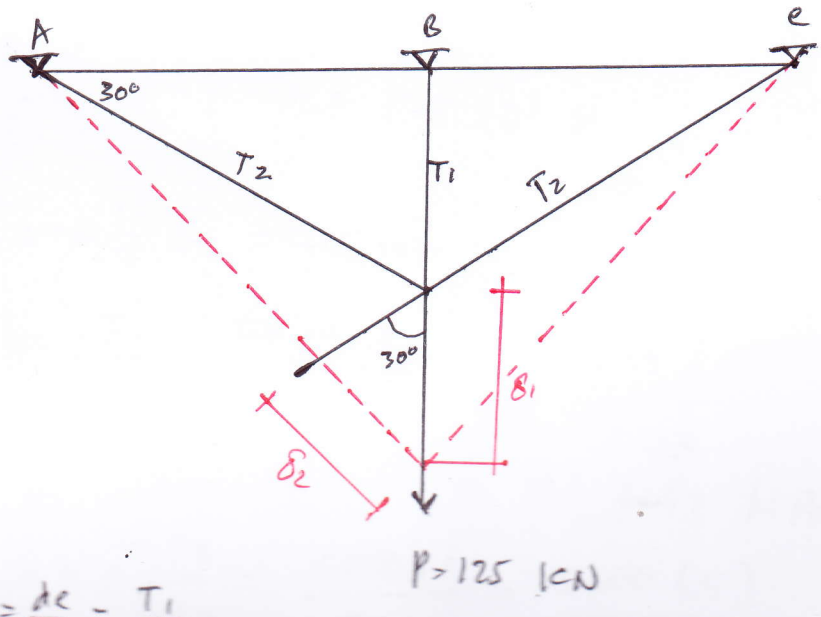

$* \sin 30^\circ = \frac{dc}{mi} = \frac{T_1}{T_2}$

$T_2 = \frac{T_1}{\sin 30^\circ} = \frac{3{,}5}{\frac{1}{2}} = 7 \text{ m}.$

$* \sin 30^\circ = \frac{\delta_2}{\delta_1}$

$\delta_2 = \sin 30^\circ \cdot \delta_1$

$= \frac{1}{2} \cdot \delta_1$

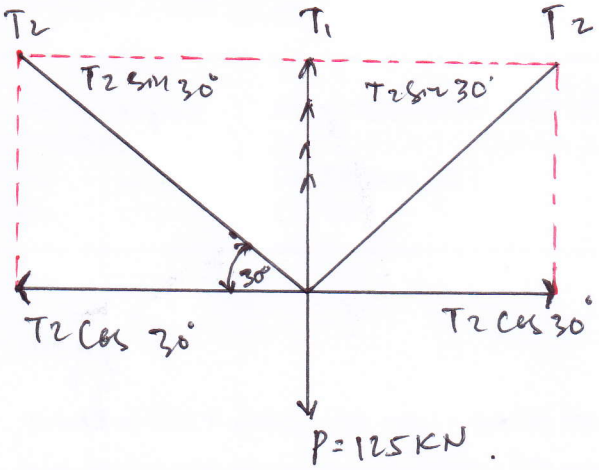

$\Sigma V = 0$

$T_1 + 2T_2 \sin 30° = P$

$T_1 + 2T_2 \cdot \frac{1}{2} = 125\ KN$

$T_1 + T_2 = 125\ KN$

$T_1 = \frac{AE\delta_1}{L_{T_1}} = \frac{350 \cdot 200 \cdot 10^3 \cdot \delta_1}{3500} = 20.000\ \delta_1$

$T_2 = \frac{AE\delta_2}{L_{T_2}} = \frac{350 \cdot 200 \cdot 10^3 \cdot \frac{1}{2}\delta_1}{7.000} = 5.000\ \delta_1$

$T_1 + T_2 = 125\ KN$

$200.000\ \delta_1 + 5.000\ \delta_1 = 125 \cdot 10^3\ N$

$\delta_1 = 5\ mm$

$\delta_2 = \frac{1}{2}\delta_1 = 2{,}5\ mm$

$\sigma_1 = \frac{T_1}{A_1} = \frac{20.000\ \delta_1}{350} = \frac{20.000\ (5)}{350}$

$= 285.7143\ MPa$

$\sigma_2 = \frac{T_2}{A_2} = \frac{5000\ \delta_1}{350} = \frac{5000\ (5)}{350}$

$= 71.43\ MPa$ //

NAMA : ANDI SUPRIYADI
NIM : 192710035
ANGKATAN : MTS-4

TUGAS 6 :

Beban vertikal P dipikul oleh rangka batang statis tak tentu seperti tergambar. Rangka batang terbuat dari baja dengan luas penampang 350 mm. hitunglah deformasi dan tegangan pada setiap batang.

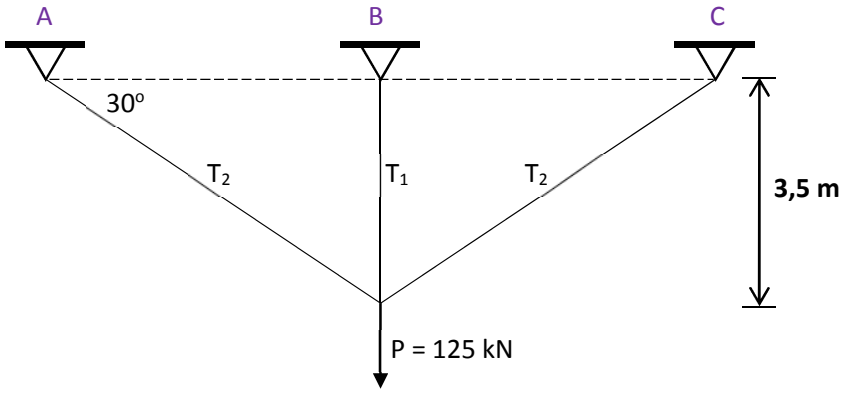

Jawab :

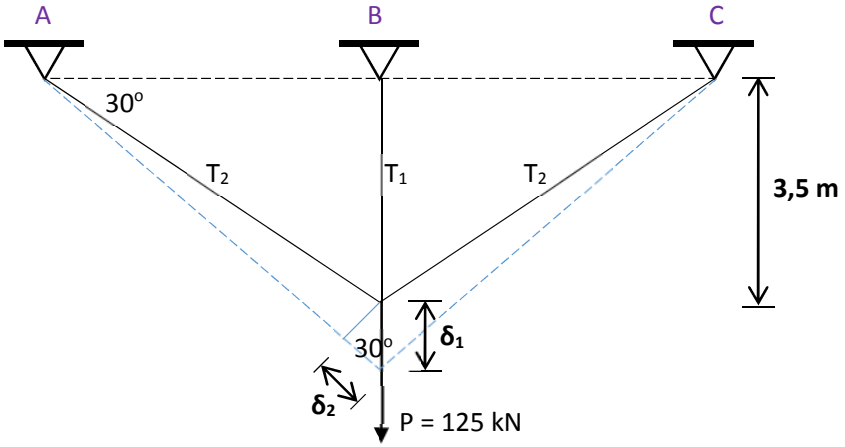

$$\sin 30^0 = \frac{LT_1}{LT_2} \rightarrow LT_2 = \frac{LT_1}{\sin 30^0} = \frac{3{,}5\ m}{\frac{1}{2}} = 7\ m$$

$$\sin 30^0 = \frac{\delta_2}{\delta_1} \rightarrow \delta_2 = \delta_1 . \sin 30^0 = \frac{1}{2}\delta_1$$

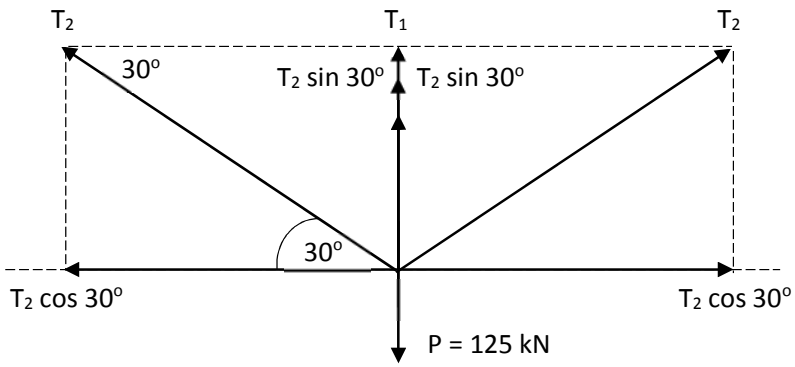

$$\sum V = 0$$

$$T_1 + 2T_2 \sin 30^0 = P \rightarrow T_1 + 2T_2 \frac{1}{2} = 125\ kN \rightarrow T_1 + T_2 = 125\ kN$$

$$T_1 = \frac{A.E.\delta_1}{L_{T1}} = \frac{350\ \cancel{mm^2}\ .\ 200.10^3 \frac{N}{\cancel{mm^2}}\ .\delta_1}{3500\ mm} = 20000\ \delta_1\ \frac{N}{mm}$$

$$T_2 = \frac{A.E.\delta_2}{L_{T2}} = \frac{350\ \cancel{mm^2}\ .\ 200.10^3 \frac{N}{\cancel{mm^2}}\ .\frac{1}{2}\delta_1}{7000\ mm} = 5000\ \delta_1\ \frac{N}{mm}$$

$$T_1 + T_2 = 125\ kN \rightarrow 20000\ \delta_1\ \frac{N}{mm} + 5000\ \delta_1\ \frac{N}{mm} = 125000\ N \rightarrow 25000\ \delta_1\ \frac{N}{mm} = 125000\ N$$

$$\delta_1 = \frac{125000}{25000}\ mm = 5\ mm$$

$$\delta_2 = \frac{1}{2}\delta_1 = \frac{1}{2}.5\ mm = 2{,}5\ mm$$

$$\sigma_1 = \frac{T_1}{A_1} = \frac{20000\ \delta_1\ \frac{N}{mm}}{350\ mm} = 285{,}71\ \frac{N}{mm^2} = 285{,}71\ MPa$$

$$\sigma_2 = \frac{T_2}{A_2} = \frac{5000\ \delta_1\ \frac{N}{mm}}{350\ mm} = 71{,}43\ \frac{N}{mm^2} = 71{,}43\ MPa$$